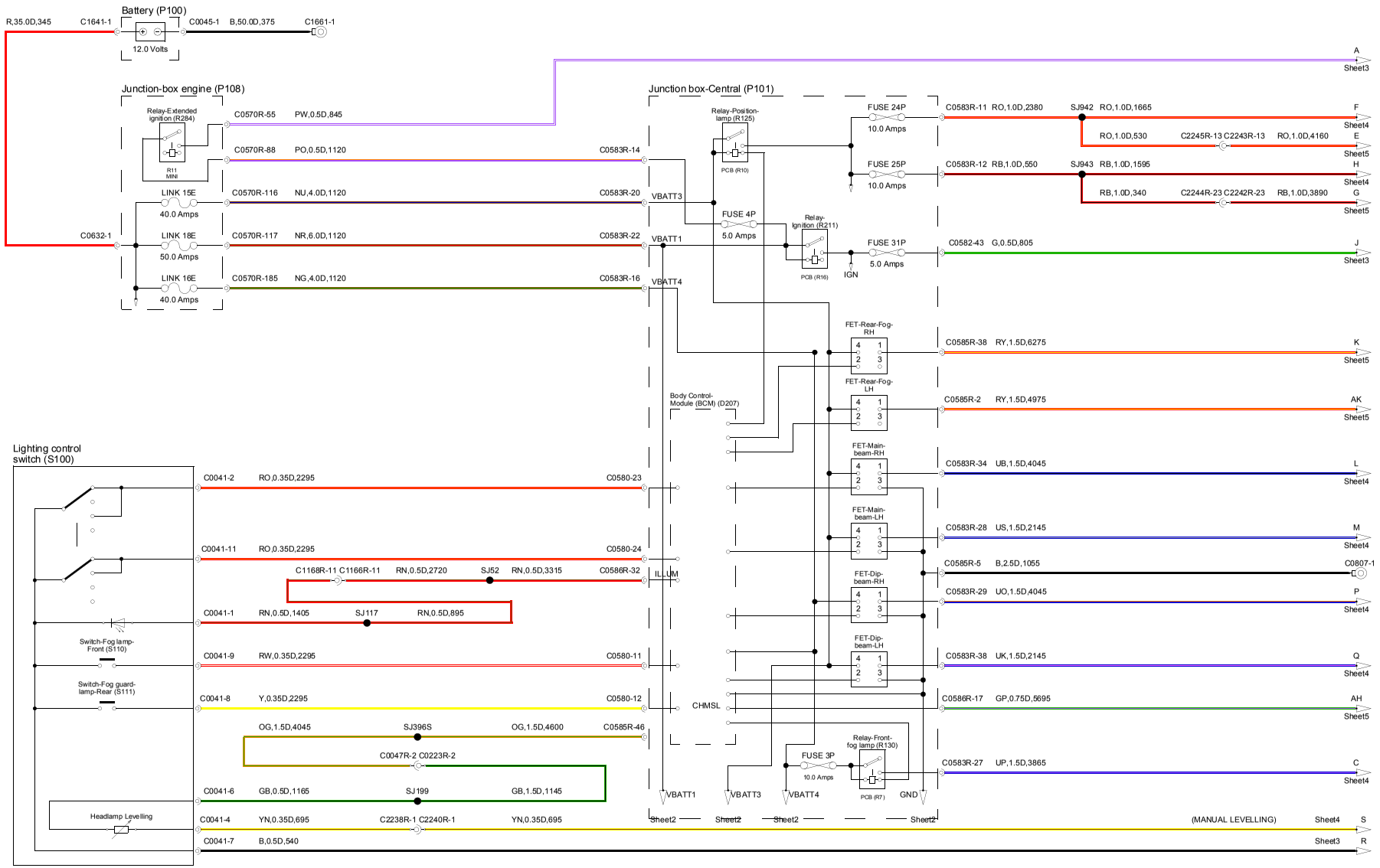
Battery (P100)
R,35.0D,345
C1641-1
C0045-1
B,50.0D,375
C1661-1
12.0 Volts
Junction-box engine (P108)
Relay-Extended ignition (R284)
R11 MINI
C0570R-55
PW,0.5D,845
C0570R-88
PO,0.5D,1120
C0583R-14
LINK 15E
40.0 Amps
C0570R-116
NU,4.0D,1120
C0583R-20
C0632-1
LINK 18E
50.0 Amps
C0570R-117
NR,6.0D,1120
C0583R-22
LINK 16E
40.0 Amps
C0570R-185
NG,4.0D,1120
C0583R-16
Junction box-Central (P101)
Relay-Position-lamp (R125)
PCB (R10)
VBATT3
FUSE 4P
5.0 Amps
VBATT1
VBATT4
Relay-Ignition (R211)
PCB (R16)
IGN
FUSE 24P
10.0 Amps
C0583R-11 RO,1.0D,2380
SJ942 RO,1.0D,1665
RO,1.0D,530
C2245R-13 C2243R-13
RO,1.0D,4160
FUSE 25P
10.0 Amps
C0583R-12 RB,1.0D,550
SJ943 RB,1.0D,1595
RB,1.0D,340
C2244R-23 C2242R-23
RB,1.0D,3890
FUSE 31P
5.0 Amps
C0582-43 G,0.5D,805
FET-Rear-Fog-RH
C0585R-38 RY,1.5D,6275
FET-Rear-Fog-LH
C0585R-2 RY,1.5D,4975
Body Control-Module (BCM) (D207)
FET-Main-beam-RH
C0583R-34 UB,1.5D,4045
FET-Main-beam-LH
C0583R-28 US,1.5D,2145
C0585R-5 B,2.5D,1055
C0807-1
FET-Dip-beam-RH
C0583R-29 UO,1.5D,4045
FET-Dip-beam-LH
C0583R-38 UK,1.5D,2145
C0586R-17 GP,0.75D,5695
Lighting control switch (S100)
C0041-2 RO,0.35D,2295
C0580-23
C0041-11 RO,0.35D,2295
C0580-24
C1168R-11 C1166R-11 RN,0.5D,2720 SJ52 RN,0.5D,3315
C0586R-32
ILLUM
C0041-1 RN,0.5D,1405 SJ117 RN,0.5D,895
Switch-Fog lamp-Front (S110)
C0041-9 RW,0.35D,2295
C0580-11
Switch-Fog guard-lamp-Rear (S111)
C0041-8 Y,0.35D,2295
C0580-12
CHMSL
OG,1.5D,4045 SJ396S OG,1.5D,4600
C0585R-46
C0047R-2 C0223R-2
C0041-6 GB,0.5D,1165 SJ199 GB,1.5D,1145
Headlamp Levelling
C0041-4 YN,0.35D,695 C2238R-1 C2240R-1 YN,0.35D,695
C0041-7 B,0.5D,540
Relay-Front-fog lamp (R130)
FUSE 3P
10.0 Amps
PCB (R7)
GND
C0583R-27 UP,1.5D,3865
Sheet2
(MANUAL LEVELLING)
Sheet3
Sheet4
Sheet5

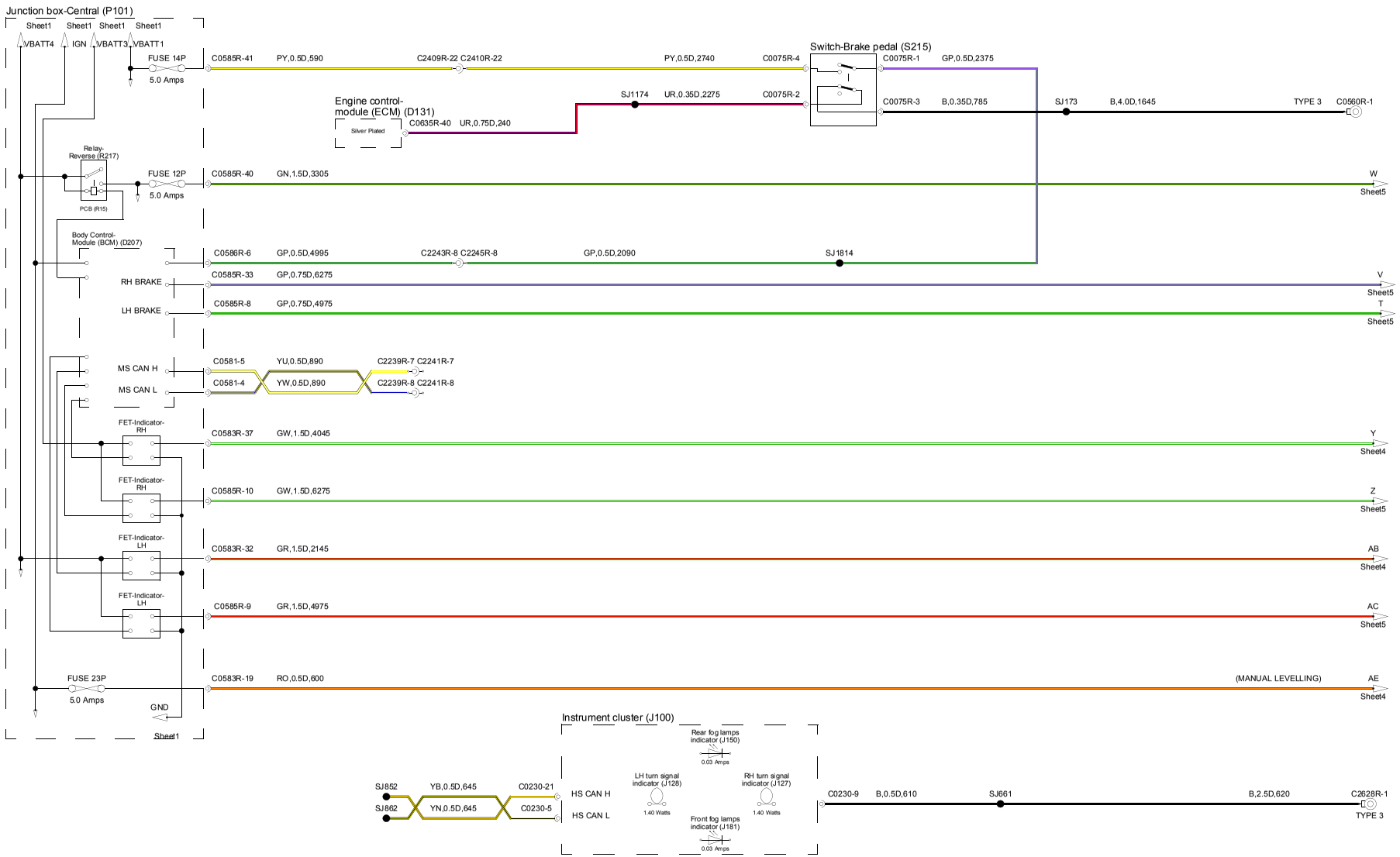
Junction box-Central (P101)
Sheet1
VBATT4
IGN
VBATT3
VBATT1
FUSE 14P
5.0 Amps
C0585R-41
PY,0.5D,590
C2409R-22 C2410R-22
PY,0.5D,2740
C0075R-4
Switch-Brake pedal (S215)
C0075R-1
GP,0.5D,2375
Engine control-module (ECM) (D131)
Silver Plated
C0635R-40
UR,0.75D,240
SJ1174
UR,0.35D,2275
C0075R-2
C0075R-3
B,0.35D,785
SJ173
B,4.0D,1645
TYPE 3
C0560R-1
Relay-Reverse (R217)
PCB (R15)
FUSE 12P
5.0 Amps
C0585R-40
GN,1.5D,3305
W
Sheet5
Body Control-Module (BCM) (D207)
C0586R-6
GP,0.5D,4995
C2243R-8 C2245R-8
GP,0.5D,2090
SJ1814
RH BRAKE
C0585R-33
GP,0.75D,6275
V
LH BRAKE
C0585R-8
GP,0.75D,4975
T
MS CAN H
MS CAN L
C0581-5
YU,0.5D,890
C2239R-7 C2241R-7
C0581-4
YW,0.5D,890
C2239R-8 C2241R-8
FET-Indicator-RH
C0583R-37
GW,1.5D,4045
Y
Sheet4
C0585R-10
GW,1.5D,6275
Z
FET-Indicator-LH
C0583R-32
GR,1.5D,2145
AB
C0585R-9
GR,1.5D,4975
AC
FUSE 23P
5.0 Amps
C0583R-19
RO,0.5D,600
(MANUAL LEVELLING)
AE
GND
Instrument cluster (J100)
Rear fog lamps indicator (J150)
0.03 Amps
LH turn signal indicator (J128)
1.40 Watts
RH turn signal indicator (J127)
1.40 Watts
Front fog lamps indicator (J181)
SJ852
YB,0.5D,645
C0230-21
SJ862
YN,0.5D,645
C0230-5
HS CAN H
HS CAN L
C0230-9
B,0.5D,610
SJ661
B,2.5D,620
C2628R-1

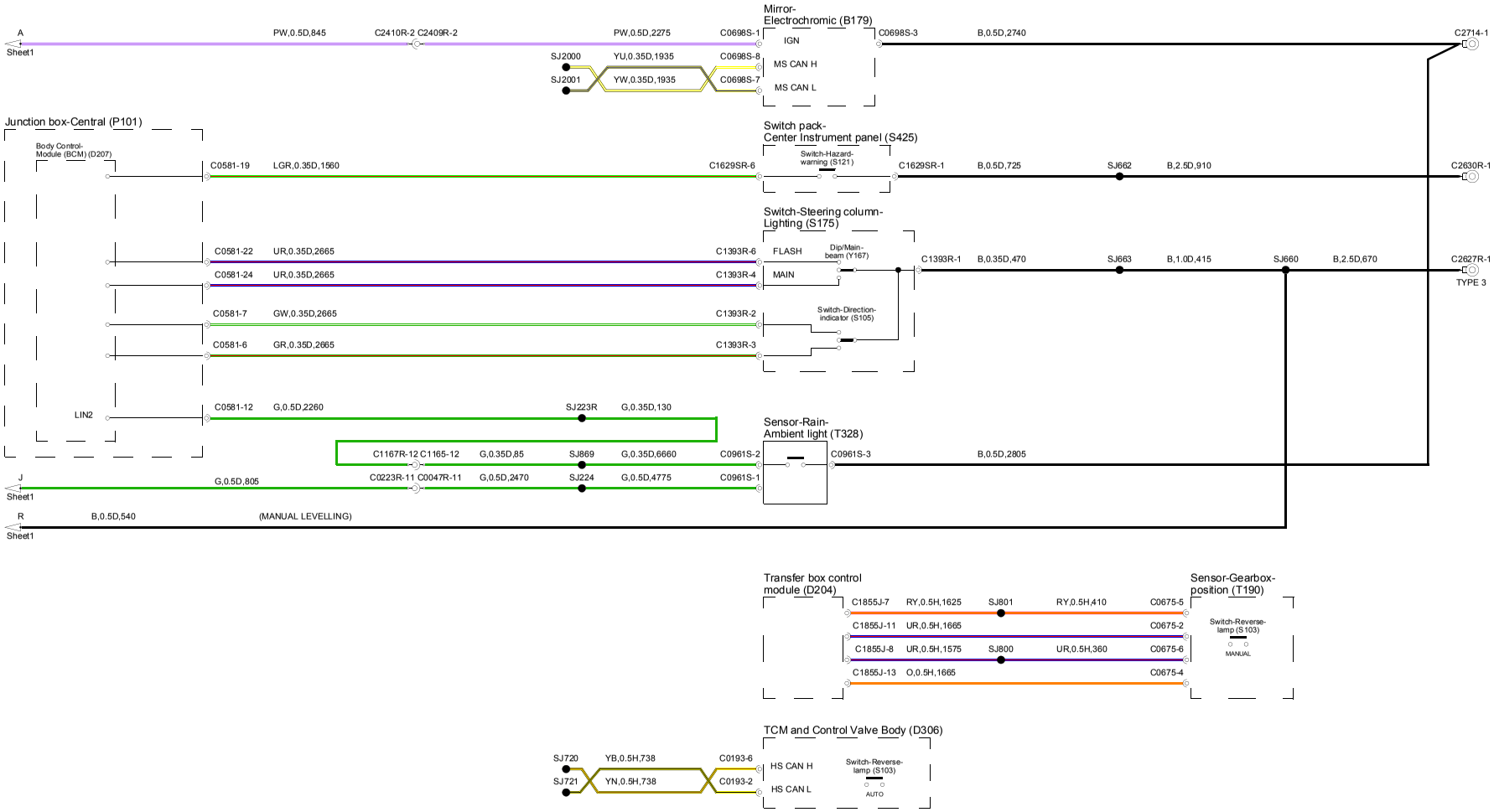
Mirror-Electrochromic (B179)
A
Sheet1
PW,0.5D,845
C2410R-2 C2409R-2
PW,0.5D,2275
C0698S-1
IGN
C0698S-3
B,0.5D,2740
C2714-1
SJ2000
YU,0.35D,1935
C0698S-8
MS CAN H
SJ2001
YW,0.35D,1935
C0698S-7
MS CAN L
Junction box-Central (P101)
Body Control-Module (BCM) (D207)
Switch pack-Center Instrument panel (S425)
C0581-19
LGR,0.35D,1560
C1629SR-6
Switch-Hazard-warning (S121)
C1629SR-1
B,0.5D,725
SJ662
B,2.5D,910
C2630R-1
Switch-Steering column-Lighting (S175)
C0581-22
UR,0.35D,2665
C1393R-6
FLASH
Dip/Main-beam (Y167)
C1393R-1
B,0.35D,470
SJ663
B,1.0D,415
SJ660
B,2.5D,670
C2627R-1
TYPE 3
C0581-24
UR,0.35D,2665
C1393R-4
MAIN
C0581-7
GW,0.35D,2665
C1393R-2
Switch-Direction-indicator (S105)
C0581-6
GR,0.35D,2665
C1393R-3
LIN2
C0581-12
G,0.5D,2260
SJ223R
G,0.35D,130
Sensor-Rain-Ambient light (T328)
C1167R-12 C1165-12
G,0.35D,85
SJ869
G,0.35D,6660
C0961S-2
C0961S-3
B,0.5D,2805
J
Sheet1
G,0.5D,805
C0223R-11 C0047R-11
G,0.5D,2470
SJ224
G,0.5D,4775
C0961S-1
R
Sheet1
B,0.5D,540
(MANUAL LEVELLING)
Transfer box control module (D204)
Sensor-Gearbox-position (T190)
C1855J-7
RY,0.5H,1625
SJ801
RY,0.5H,410
C0675-5
C1855J-11
UR,0.5H,1665
C0675-2
Switch-Reverse-lamp (S103)
MANUAL
C1855J-8
UR,0.5H,1575
SJ800
UR,0.5H,360
C0675-6
C1855J-13
O,0.5H,1665
C0675-4
TCM and Control Valve Body (D306)
SJ720
YB,0.5H,738
C0193-6
HS CAN H
Switch-Reverse-lamp (S103)
AUTO
SJ721
YN,0.5H,738
C0193-2
HS CAN L

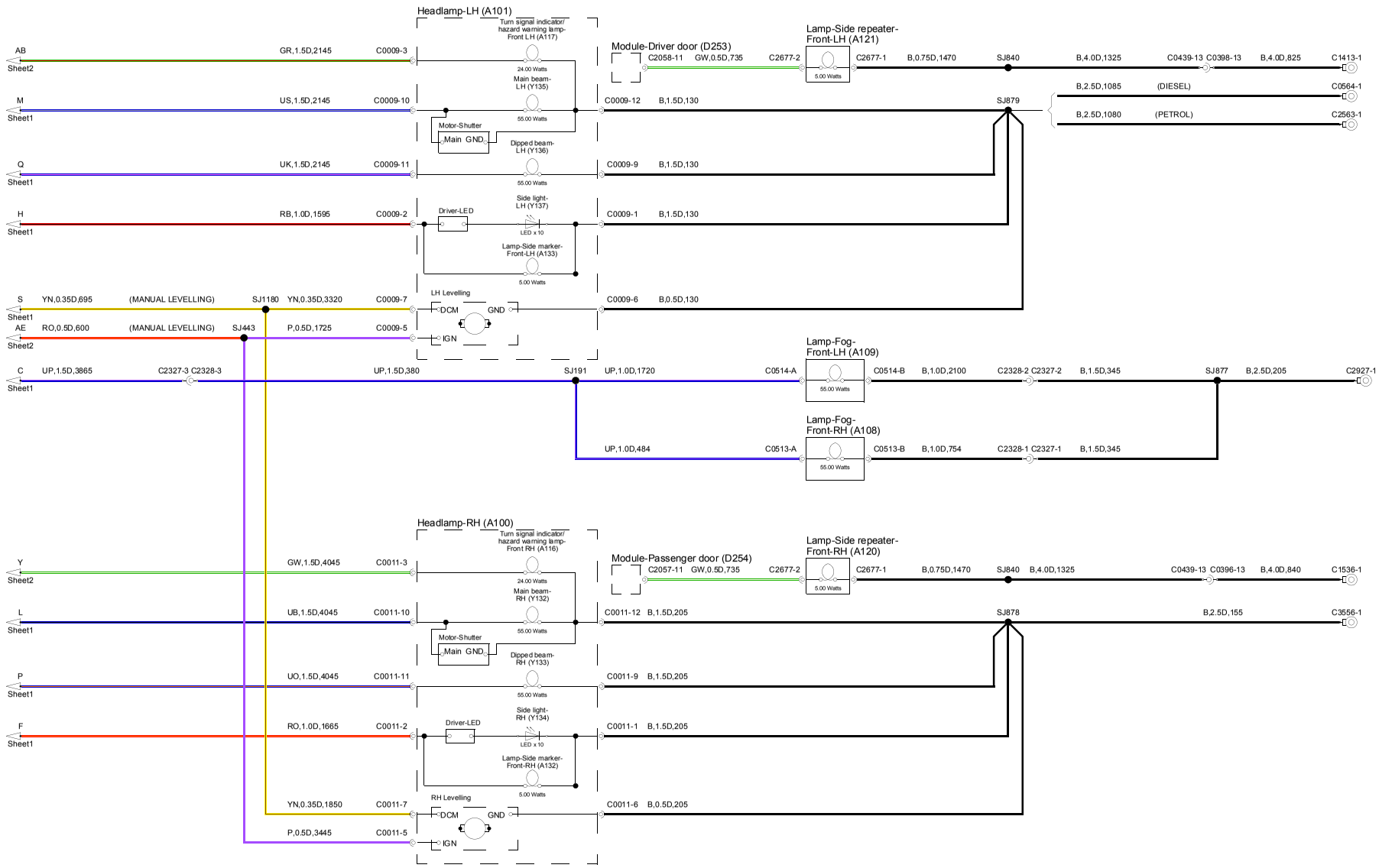
Headlamp-LH (A101)
Turn signal indicator/ hazard warning lamp- Front LH (A117)
24.00 Watts
Main beam- LH (Y135)
55.00 Watts
Motor-Shutter
Main GND
Dipped beam- LH (Y136)
55.00 Watts
Side light- LH (Y137)
LED x 10
Driver-LED
Lamp-Side marker- Front-LH (A133)
5.00 Watts
LH Levelling
DCM
GND
IGN
AB
Sheet2
GR,1.5D,2145
C0009-3
M
Sheet1
US,1.5D,2145
C0009-10
Q
Sheet1
UK,1.5D,2145
C0009-11
H
Sheet1
RB,1.0D,1595
C0009-2
S
Sheet1
YN,0.35D,695
(MANUAL LEVELLING)
SJ1180
YN,0.35D,3320
C0009-7
AE
Sheet2
RO,0.5D,600
(MANUAL LEVELLING)
SJ443
P,0.5D,1725
C0009-5
Module-Driver door (D253)
C2058-11
GW,0.5D,735
C2677-2
Lamp-Side repeater- Front-LH (A121)
5.00 Watts
C2677-1
B,0.75D,1470
SJ840
B,4.0D,1325
C0439-13
C0398-13
B,4.0D,825
C1413-1
B,2.5D,1085
(DIESEL)
C0564-1
B,2.5D,1080
(PETROL)
C2563-1
C0009-12
B,1.5D,130
SJ879
C0009-9
B,1.5D,130
C0009-1
B,1.5D,130
C0009-6
B,0.5D,130
C
Sheet1
UP,1.5D,3865
C2327-3
C2328-3
UP,1.5D,380
SJ191
UP,1.0D,1720
C0514-A
Lamp-Fog- Front-LH (A109)
55.00 Watts
C0514-B
B,1.0D,2100
C2328-2
C2327-2
B,1.5D,345
SJ877
B,2.5D,205
C2927-1
UP,1.0D,484
C0513-A
Lamp-Fog- Front-RH (A108)
55.00 Watts
C0513-B
B,1.0D,754
C2328-1
C2327-1
B,1.5D,345
Headlamp-RH (A100)
Turn signal indicator/ hazard warning lamp- Front RH (A116)
24.00 Watts
Main beam- RH (Y132)
55.00 Watts
Motor-Shutter
Main GND
Dipped beam- RH (Y133)
55.00 Watts
Side light- RH (Y134)
LED x 10
Driver-LED
Lamp-Side marker- Front-RH (A132)
5.00 Watts
RH Levelling
DCM
GND
IGN
Y
Sheet2
GW,1.5D,4045
C0011-3
L
Sheet1
UB,1.5D,4045
C0011-10
P
Sheet1
UO,1.5D,4045
C0011-11
F
Sheet1
RO,1.0D,1665
C0011-2
YN,0.35D,1850
C0011-7
P,0.5D,3445
C0011-5
Module-Passenger door (D254)
C2057-11
GW,0.5D,735
C2677-2
Lamp-Side repeater- Front-RH (A120)
5.00 Watts
C2677-1
B,0.75D,1470
SJ840
B,4.0D,1325
C0439-13
C0396-13
B,4.0D,840
C1536-1
C0011-12
B,1.5D,205
SJ878
B,2.5D,155
C3556-1
C0011-9
B,1.5D,205
C0011-1
B,1.5D,205
C0011-6
B,0.5D,205

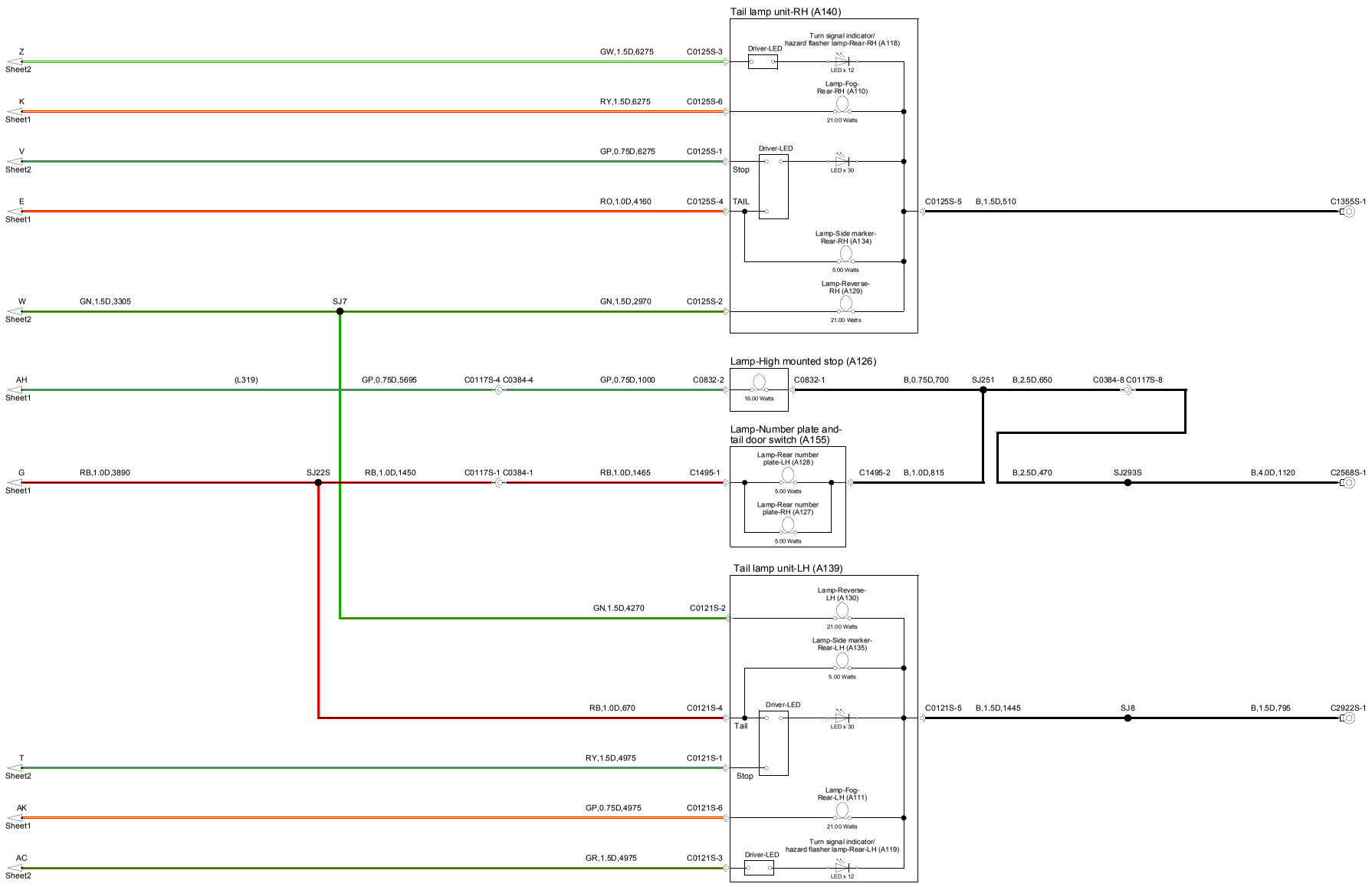
Tail lamp unit-RH (A140)
Z
Sheet2
GW,1.5D,6275
C0125S-3
Driver-LED
Turn signal indicator/
hazard flasher lamp-Rear-RH (A118)
LED x 12
K
Sheet1
RY,1.5D,6275
C0125S-6
Lamp-Fog-
Rear-RH (A110)
21.00 Watts
V
Sheet2
GP,0.75D,6275
C0125S-1
Driver-LED
Stop
LED x 30
E
Sheet1
RO,1.0D,4160
C0125S-4
TAIL
C0125S-5
B,1.5D,510
C1355S-1
Lamp-Side marker-
Rear-RH (A134)
5.00 Watts
Lamp-Reverse-
RH (A129)
21.00 Watts
W
Sheet2
GN,1.5D,3305
SJ7
GN,1.5D,2970
C0125S-2
Lamp-High mounted stop (A126)
AH
Sheet1
(L319)
GP,0.75D,5695
C0117S-4 C0384-4
GP,0.75D,1000
C0832-2
16.00 Watts
C0832-1
B,0.75D,700
SJ251
B,2.5D,650
C0384-8 C0117S-8
Lamp-Number plate and-
tail door switch (A155)
G
Sheet1
RB,1.0D,3890
SJ22S
RB,1.0D,1450
C0117S-1 C0384-1
RB,1.0D,1465
C1495-1
Lamp-Rear number
plate-LH (A128)
5.00 Watts
Lamp-Rear number
plate-RH (A127)
5.00 Watts
C1495-2
B,1.0D,815
B,2.5D,470
SJ293S
B,4.0D,1120
C2568S-1
Tail lamp unit-LH (A139)
Lamp-Reverse-
LH (A130)
GN,1.5D,4270
C0121S-2
21.00 Watts
Lamp-Side marker-
Rear-LH (A135)
5.00 Watts
RB,1.0D,670
C0121S-4
Driver-LED
Tail
LED x 30
C0121S-5
B,1.5D,1445
SJ8
B,1.5D,795
C2922S-1
T
Sheet2
RY,1.5D,4975
C0121S-1
Stop
AK
Sheet1
GP,0.75D,4975
C0121S-6
Lamp-Fog-
Rear-LH (A111)
21.00 Watts
AC
Sheet2
GR,1.5D,4975
C0121S-3
Driver-LED
Turn signal indicator/
hazard flasher lamp-Rear-LH (A119)
LED x 12

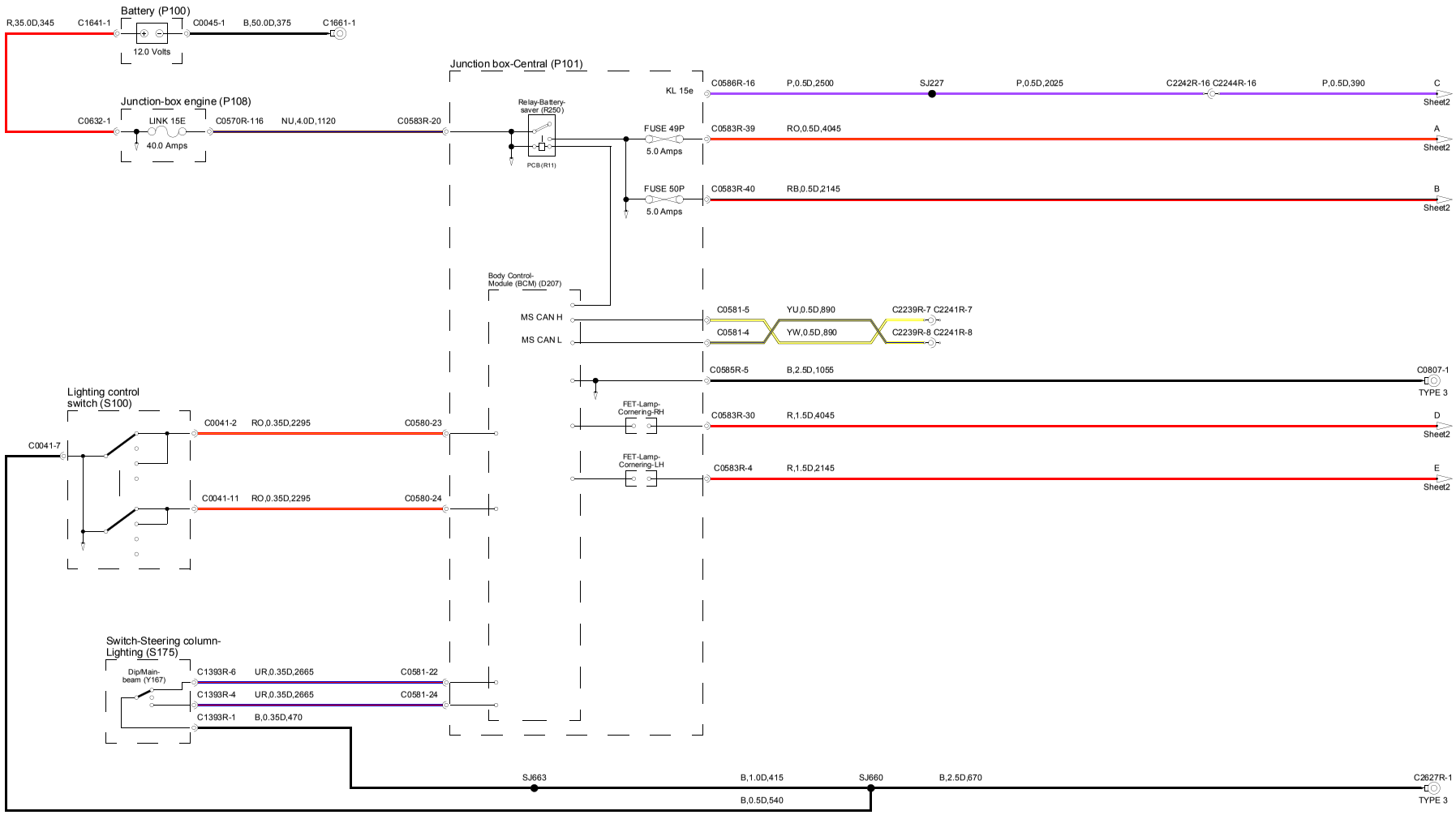
Battery (P100)
R,35.0D,345
C1641-1
C0045-1
B,50.0D,375
C1661-1
12.0 Volts
Junction-box engine (P108)
C0632-1
LINK 15E
40.0 Amps
C0570R-116
NU,4.0D,1120
C0583R-20
Junction box-Central (P101)
Relay-Battery-saver (R250)
PCB (R11)
KL 15e
C0586R-16
P,0.5D,2500
SJ227
P,0.5D,2025
C2242R-16 C2244R-16
P,0.5D,390
C
Sheet2
FUSE 49P
5.0 Amps
C0583R-39
RO,0.5D,4045
A
Sheet2
FUSE 50P
5.0 Amps
C0583R-40
RB,0.5D,2145
B
Sheet2
Body Control-Module (BCM) (D207)
MS CAN H
MS CAN L
C0581-5
YU,0.5D,890
C2239R-7 C2241R-7
C0581-4
YW,0.5D,890
C2239R-8 C2241R-8
C0585R-5
B,2.5D,1055
C0807-1
TYPE 3
FET-Lamp-Cornering-RH
C0583R-30
R,1.5D,4045
D
Sheet2
FET-Lamp-Cornering-LH
C0583R-4
R,1.5D,2145
E
Sheet2
Lighting control switch (S100)
C0041-7
C0041-2
RO,0.35D,2295
C0580-23
C0041-11
RO,0.35D,2295
C0580-24
Switch-Steering column-Lighting (S175)
Dip/Main-beam (Y167)
C1393R-6
UR,0.35D,2665
C0581-22
C1393R-4
UR,0.35D,2665
C0581-24
C1393R-1
B,0.35D,470
SJ663
B,1.0D,415
SJ660
B,2.5D,670
C2627R-1
TYPE 3
B,0.5D,540

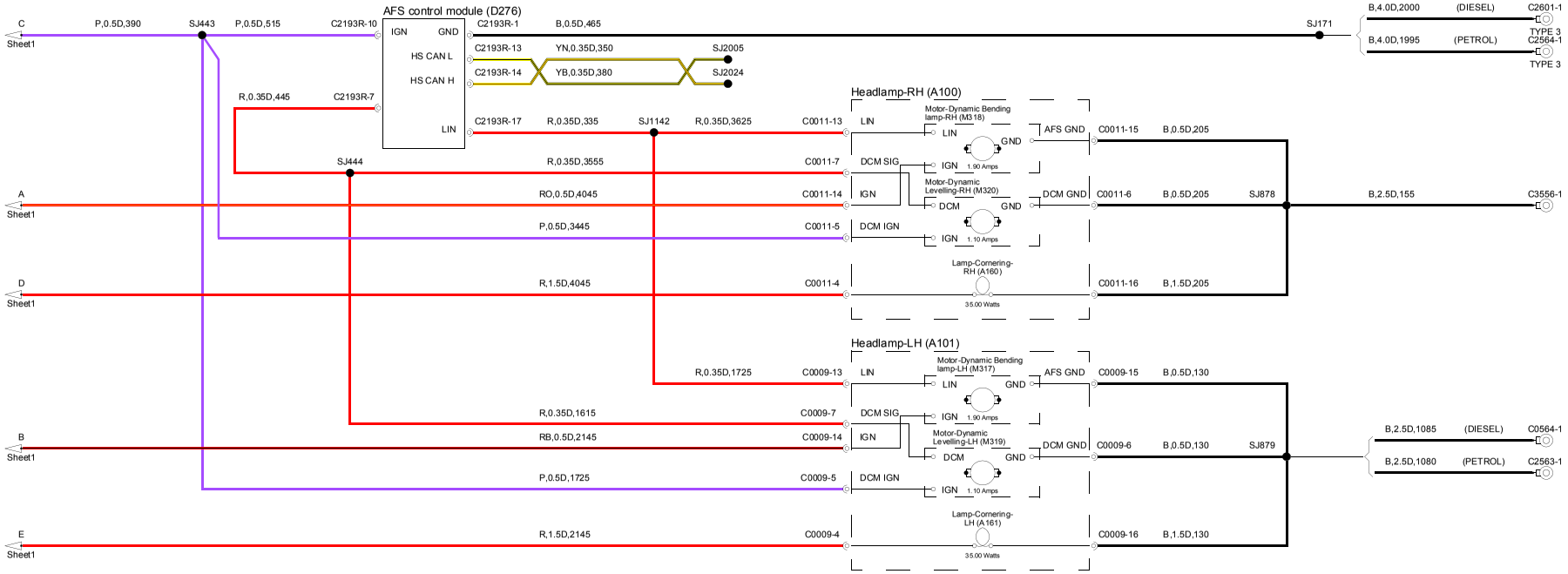
AFS control module (D276)
IGN
GND
HS CAN L
HS CAN H
LIN
C
Sheet1
P,0.5D,390
SJ443
P,0.5D,515
C2193R-10
C2193R-1
B,0.5D,465
C2193R-13
YN,0.35D,350
SJ2005
C2193R-14
YB,0.35D,380
SJ2024
R,0.35D,445
C2193R-7
C2193R-17
R,0.35D,335
SJ1142
R,0.35D,3625
C0011-13
SJ444
R,0.35D,3555
C0011-7
A
RO,0.5D,4045
C0011-14
P,0.5D,3445
C0011-5
D
R,1.5D,4045
C0011-4
Headlamp-RH (A100)
LIN
Motor-Dynamic Bending lamp-RH (M318)
LIN
GND
1.90 Amps
DCM SIG
IGN
Motor-Dynamic Levelling-RH (M320)
IGN
DCM
GND
1.10 Amps
DCM IGN
IGN
Lamp-Cornering-RH (A160)
35.00 Watts
AFS GND
C0011-15
B,0.5D,205
DCM GND
C0011-6
B,0.5D,205
SJ878
C0011-16
B,1.5D,205
SJ171
B,4.0D,2000
(DIESEL)
C2601-1
TYPE 3
B,4.0D,1995
(PETROL)
C2564-1
TYPE 3
B,2.5D,155
C3556-1
Headlamp-LH (A101)
R,0.35D,1725
C0009-13
LIN
Motor-Dynamic Bending lamp-LH (M317)
LIN
GND
1.90 Amps
R,0.35D,1615
C0009-7
DCM SIG
IGN
B
RB,0.5D,2145
C0009-14
IGN
Motor-Dynamic Levelling-LH (M319)
DCM
GND
1.10 Amps
P,0.5D,1725
C0009-5
DCM IGN
IGN
E
R,1.5D,2145
C0009-4
Lamp-Cornering-LH (A161)
35.00 Watts
AFS GND
C0009-15
B,0.5D,130
DCM GND
C0009-6
B,0.5D,130
SJ879
C0009-16
B,1.5D,130
B,2.5D,1085
(DIESEL)
C0564-1
B,2.5D,1080
(PETROL)
C2563-1

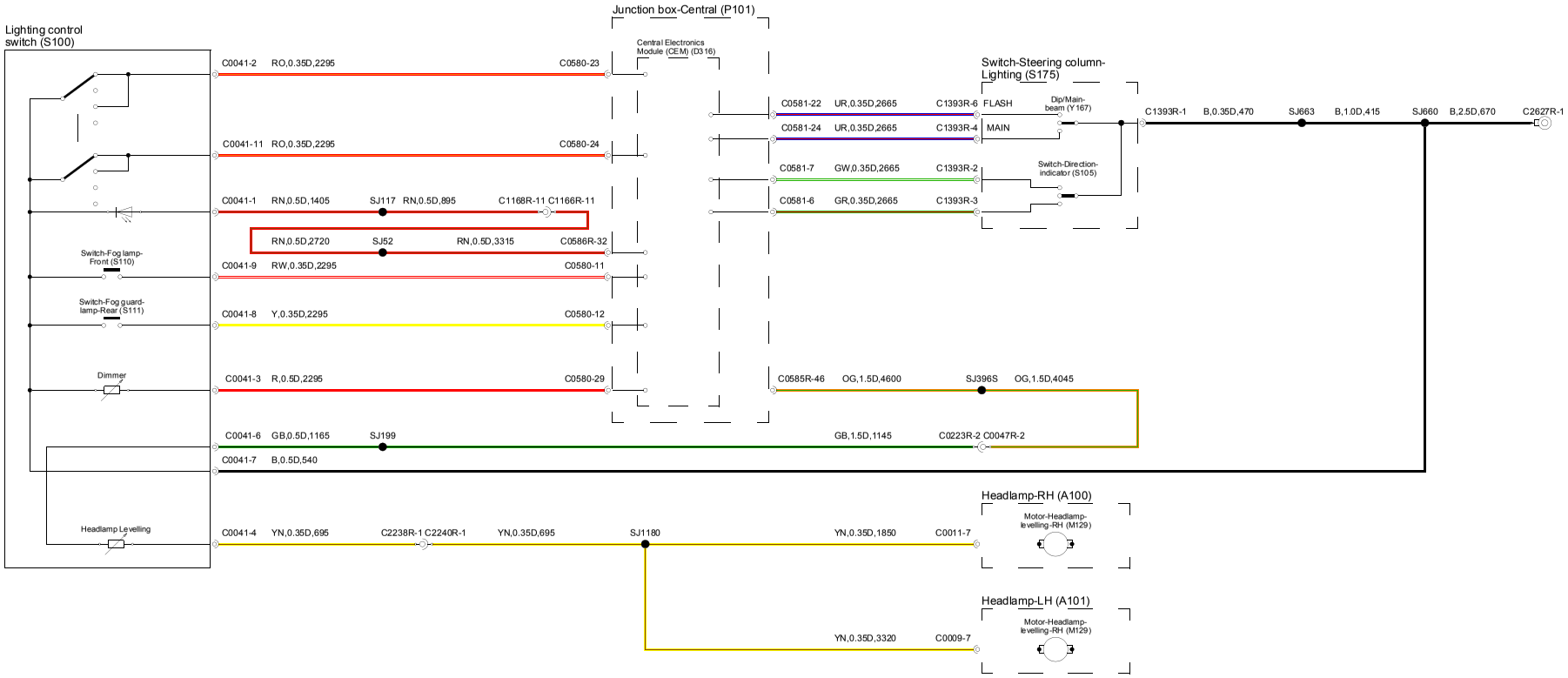
Lighting control switch (S100)
Junction box-Central (P101)
Central Electronics Module (CEM) (D316)
Switch-Steering column-Lighting (S175)
Dip/Main-beam (Y167)
Switch-Direction-indicator (S105)
Switch-Fog lamp-Front (S110)
Switch-Fog guard-lamp-Rear (S111)
Dimmer
Headlamp Levelling
Headlamp-RH (A100)
Motor-Headlamp-levelling-RH (M129)
Headlamp-LH (A101)
Motor-Headlamp-levelling-RH (M129)
C0041-2 RO,0.35D,2295 C0580-23
C0041-11 RO,0.35D,2295 C0580-24
C0041-1 RN,0.5D,1405 SJ117 RN,0.5D,895 C1168R-11 C1166R-11
RN,0.5D,2720 SJ52 RN,0.5D,3315 C0586R-32
C0041-9 RW,0.35D,2295 C0580-11
C0041-8 Y,0.35D,2295 C0580-12
C0041-3 R,0.5D,2295 C0580-29
C0041-6 GB,0.5D,1165 SJ199
C0041-7 B,0.5D,540
C0041-4 YN,0.35D,695 C2238R-1 C2240R-1 YN,0.35D,695 SJ1180
C0581-22 UR,0.35D,2665 C1393R-6 FLASH
C0581-24 UR,0.35D,2665 C1393R-4 MAIN
C0581-7 GW,0.35D,2665 C1393R-2
C0581-6 GR,0.35D,2665 C1393R-3
C0585R-46 OG,1.5D,4600 SJ396S OG,1.5D,4045
GB,1.5D,1145 C0223R-2 C0047R-2
YN,0.35D,1850 C0011-7
YN,0.35D,3320 C0009-7
C1393R-1 B,0.35D,470 SJ663 B,1.0D,415 SJ660 B,2.5D,670 C2627R-1

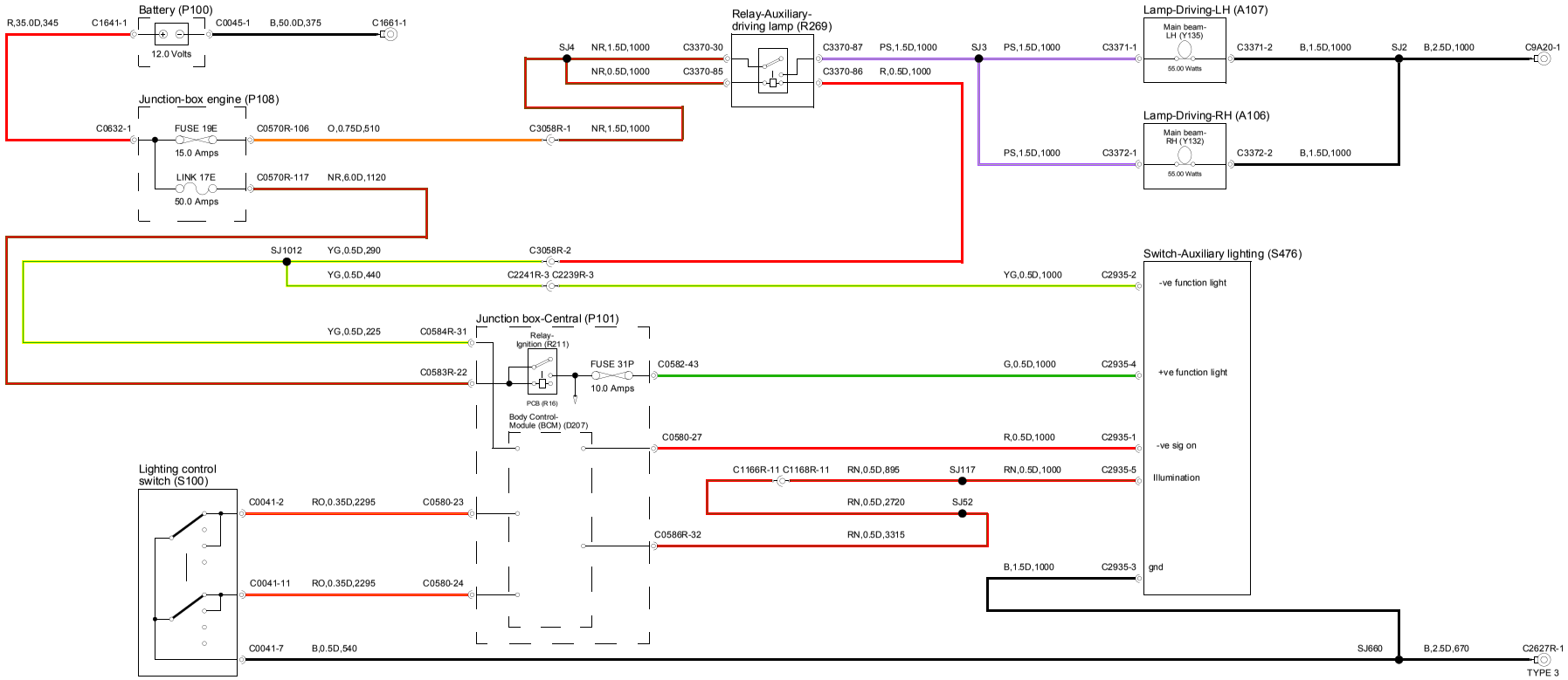
Battery (P100)
R,35.0D,345
C1641-1
C0045-1
B,50.0D,375
C1661-1
12.0 Volts
Junction-box engine (P108)
C0632-1
FUSE 19E
15.0 Amps
C0570R-106
O,0.75D,510
LINK 17E
50.0 Amps
C0570R-117
NR,6.0D,1120
Relay-Auxiliary-driving lamp (R269)
SJ4
NR,1.5D,1000
C3370-30
NR,0.5D,1000
C3370-85
C3370-87
PS,1.5D,1000
C3370-86
R,0.5D,1000
C3058R-1
NR,1.5D,1000
SJ3
PS,1.5D,1000
C3371-1
Lamp-Driving-LH (A107)
Main beam-LH (Y135)
55.00 Watts
C3371-2
B,1.5D,1000
SJ2
B,2.5D,1000
C9A20-1
Lamp-Driving-RH (A106)
Main beam-RH (Y132)
PS,1.5D,1000
C3372-1
C3372-2
B,1.5D,1000
SJ1012
YG,0.5D,290
C3058R-2
YG,0.5D,440
C2241R-3
C2239R-3
YG,0.5D,1000
C2935-2
Switch-Auxiliary lighting (S476)
-ve function light
Junction box-Central (P101)
YG,0.5D,225
C0584R-31
Relay-Ignition (R211)
C0583R-22
FUSE 31P
10.0 Amps
C0582-43
G,0.5D,1000
C2935-4
+ve function light
PCB (R16)
Body Control-Module (BCM) (D207)
C0580-27
R,0.5D,1000
C2935-1
-ve sig on
C1166R-11
C1168R-11
RN,0.5D,895
SJ117
RN,0.5D,1000
C2935-5
Illumination
RN,0.5D,2720
SJ52
C0586R-32
RN,0.5D,3315
B,1.5D,1000
C2935-3
gnd
Lighting control switch (S100)
C0041-2
RO,0.35D,2295
C0580-23
C0041-11
RO,0.35D,2295
C0580-24
C0041-7
B,0.5D,540
SJ660
B,2.5D,670
C2627R-1
TYPE 3